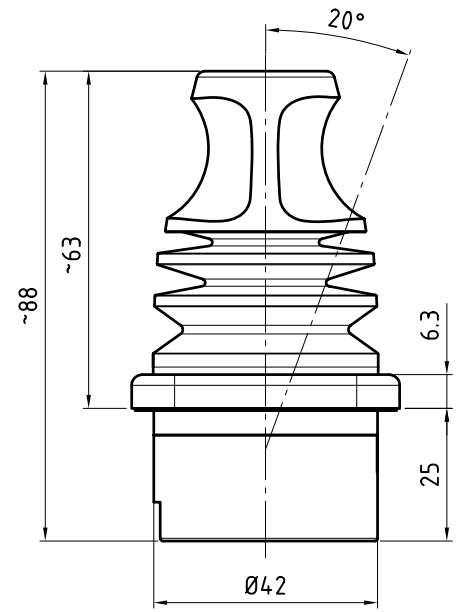

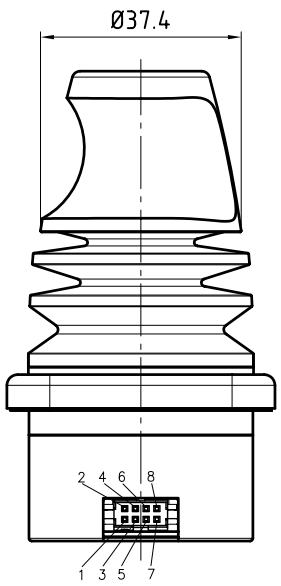

Gate
(Top view)

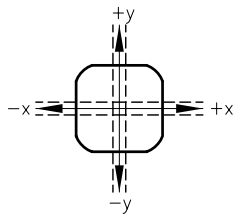

Output diagram X−,Y−axis

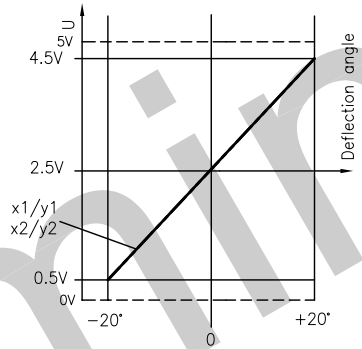

Description	
Joystick type SK 315−077	
Number of axes	2−axes, x−axis, y−axis both axes are redundant
Operation by	Handle
Cross guidance	soft
Retaining spring	normal, Z−Nr. 60−112
Connector:	Minitek Shrouded Header 90°, 8−poles
Mating connector:	Minitek IDC Receptacle, 8−poles

Electrical characteristics	
Operating voltage	5 V DC
Sensor	Hall Effect technology

Pin	
01	Supply voltage
02	x1 (−x=0.5V, middle=2.5V, +x=4.5V)
03	Ground
04	y1 (−y=0.5V, middle=2.5V, +y=4.5V)
05	y2 (−y=0.5V, middle=2.5V, +y=4.5V)
06	do not use
07	x2 (−x=0.5V, middle=2.5V, +x=4.5V)
08	do not use

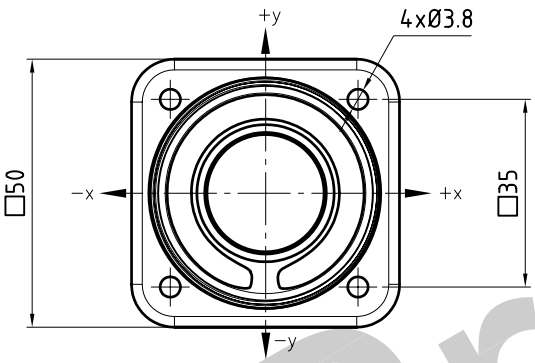

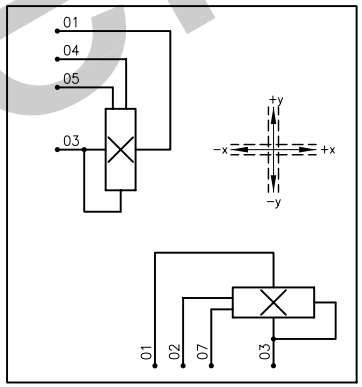

Preliminary

						Oberfläche	Maßstab 1:1
					Datum	Name	
				Bearb.	19.06.13	Kiener M.	Joystick
				Gepr.			
				Norm			
				GENGE &THOMA AG CH-2543 Lengnau/Biel			315-077
Zust.	Änderungen	Datum	Name	Dateiname E:\Dwg\SK 315\...\SK315-077.dwg			

Position | Menge | Blatt | Bl