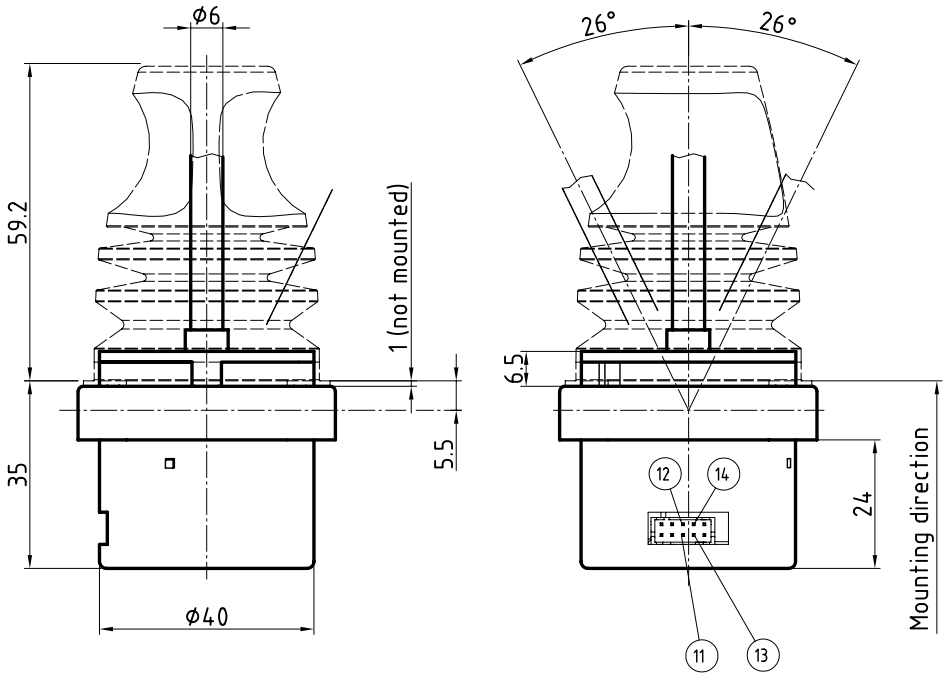

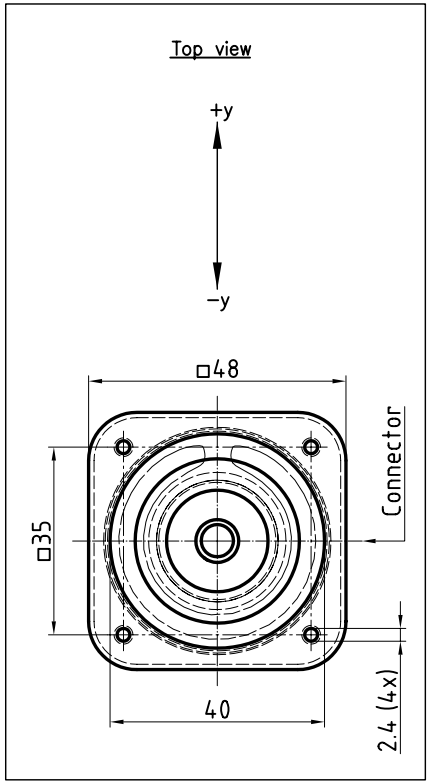

Axis		Potentiometer	
	Direction	Number	Centertab
x−Axis	+x		
	Joystick/Wiper		
	−x		
y−Axis	+y	11	
	Joystick/Wiper	12	14
	−y	13	

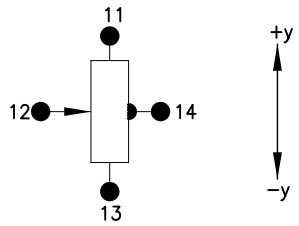

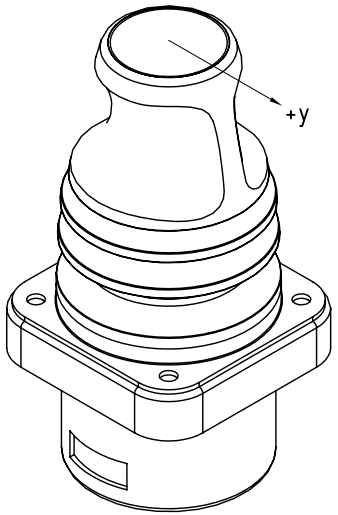

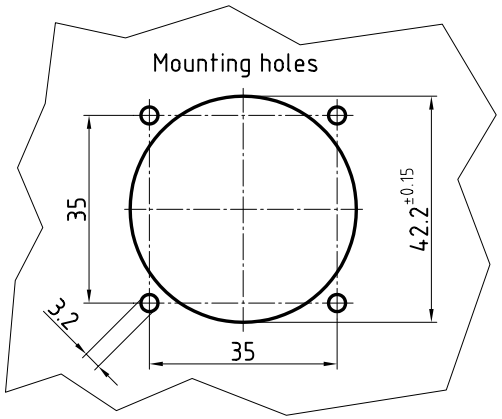

Electrical characteristics	
Resistance Value	5 kOhm ± 20%
Power disipation	0.2 Watt at 40°

Description:	
Joystick SK 41−053E	
Number of axis	1−axis, y−axis
Operation by	handle, exchangeable knob
Connector:	JST, 10−pole, S10B−PHDSS
Plug: Not reversable	JST, 10−pole, PHDR−10VS
Centertab	±1.25°

						Oberfläche	Maßstab 1:1
					Datum	Name	
				Bearb.	13.4.2007	DM	Joystick
				Gepr.			
				Norm			
				GENGE &THOMA AG CH-2543 Lengnau/Biel			41-053E
Zust.	Änderung	Datum	Name	Dateiname E:\Dwg\Dwg SK41\41-053E.dwg			

Position Menge

Blatt

Bl