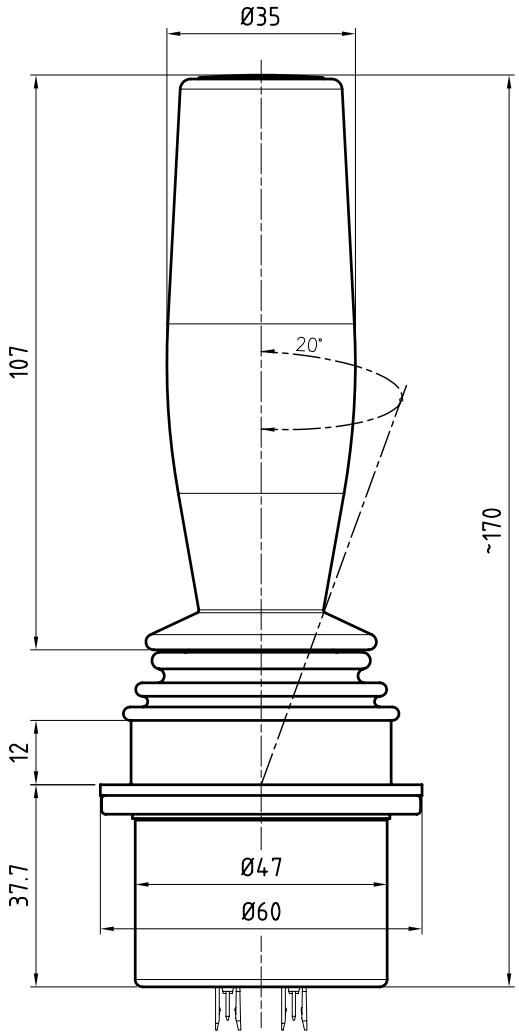

Bottom view

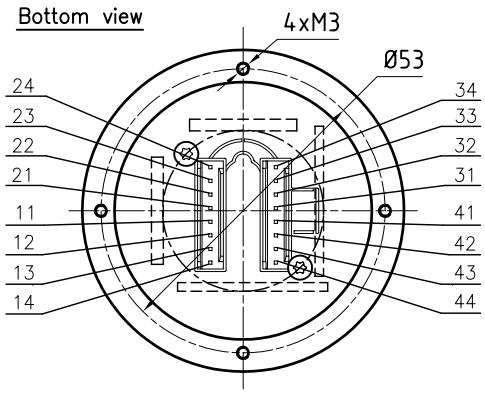

Gate
(Top view)

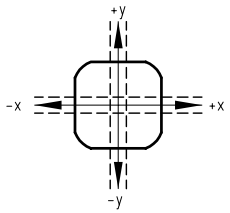

Output diagramm
x–, y–axis

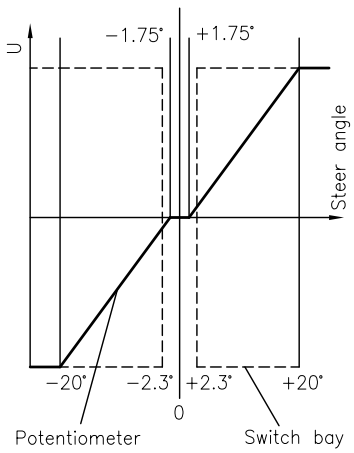

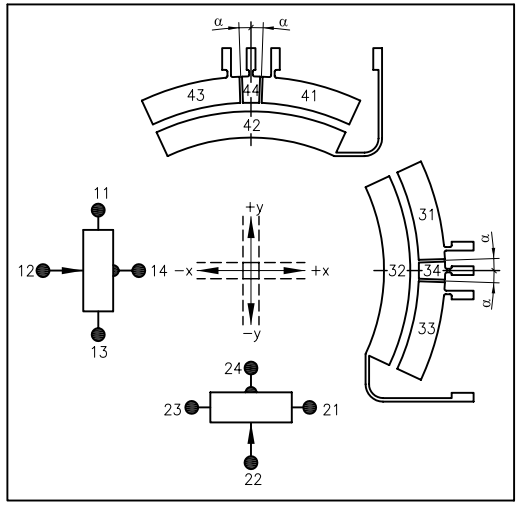

Description	
Joystick Type SK 60–0720	
Number of axis	2–axis, x–, y–axis
Operating by	Handle
Cross guide	light
Plug: DUBOX Walled Header	2x8–poles: 76384–308
Counter plug: Dubox Housing ROTATED NOT INSERTABLE	2x8–poles: 65240–08
Retaining spring	strong Z–Nr. 50–116
Switch function	1–1–1

Electrical characteristics	
Contact rating	Zero potentional difference between segments 5 V DC, 5 mA
Resistance value	5 kOhm ±20%
Power disipation	0.2 Watt at 40° per axis
Operating voltage	max. 30 V DC

Axis		Potentiometer		Connector side	
	Direction	Colour/ Number	Center tab	Joystick in mid–position	
x–axis	↑ +x	21 green	24 grey	41 yellow	open
	Wiper	22 blue		42 orange	44 brown
	↓ –x	23 violet		43 red	open
y–axis	↑ +y	11 yellow	14 brown	31 green	open
	Wiper	12 orange		32 blue	34 grey
	↓ –y	13 red		33 violet	open

						Oberfläche	Maßstab 1:1
					Datum	Name	
				Bearb.	31.08.10	Kiener M.	Joystick
				Gepr.			
				Norm			
				GENGE &THOMA AG CH–2543 Lengnau/Biel			60-0720
Zust.	Änderungen	Datum	Name	Dateiname E:\Dwg SK60\60-0720.dwg			

Position | Menge | Blatt | Bl