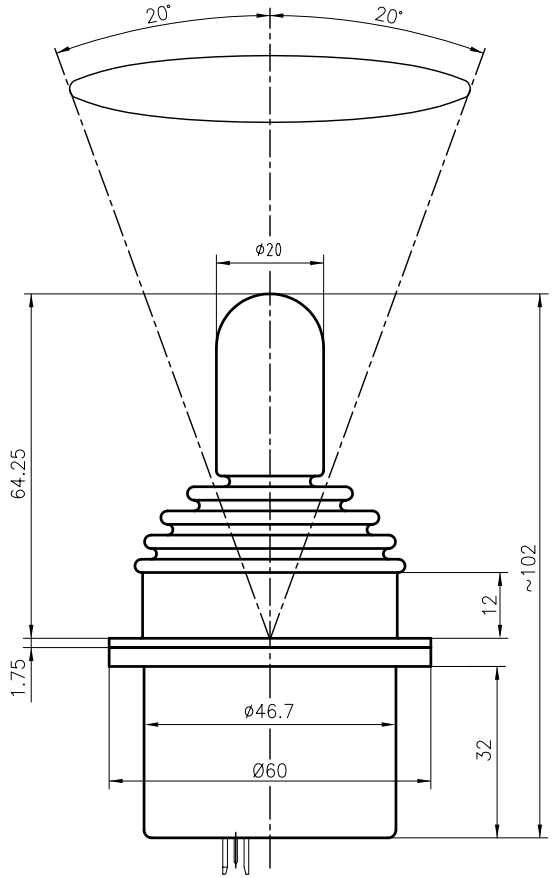

Gate
(Top view)

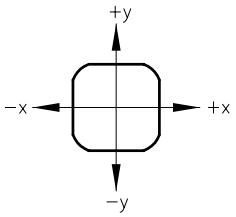

Output diagramm
x−axis / y−axis

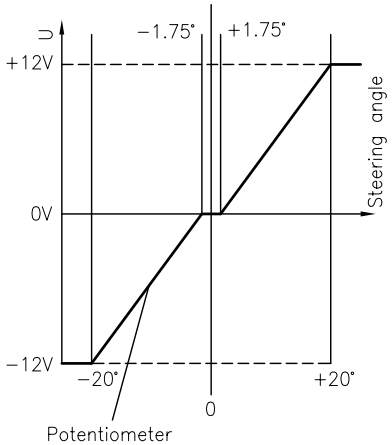

Description	
Joystick Type SK 60−0765	
Number of axis	2−axis, x−axis, y−axis
Operation by	Rubber bellow 48−203 x,y−axis with friction brake
Plug: DUBOX Walled Header	8−poles: 76384−308
Counter plug: Dubox Housing	8−poles: 65240−008
Center tab	±1.75°
Switch function	−

Electrical characteristics	
Resistance value	5 kOhm ± 20%
Operating voltage	max. 30V DC

Axis		Potentiometer side		Connector side	
	Direction	Colour/ number	Center tab	Joystick in mid−position	
x−axis	↑ +x	21	24		
	Wiper	22			
	↓ −x	23			
y−axis	↑ +y	11	14		
	Wiper	12			
	↓ −y	13			

Bottom view

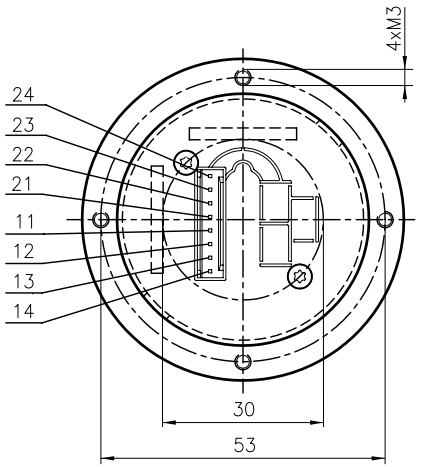

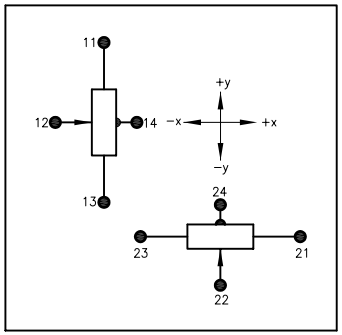

						Oberfläche	Maßstab 1:1	Position Menge
					Datum	Name		
				Bearb.	08.02.11	M. Kiener	Joystick	
				Gepr.				
				Norm				
				GENGE &THOMA AG CH−2543 Lengnau/Biel			60-0765	Blatt
Zust.	Änderungen	Datum	Name	Dateiname E:\Dwg\Dwg SK60\...\60-0765.dwg				Bl