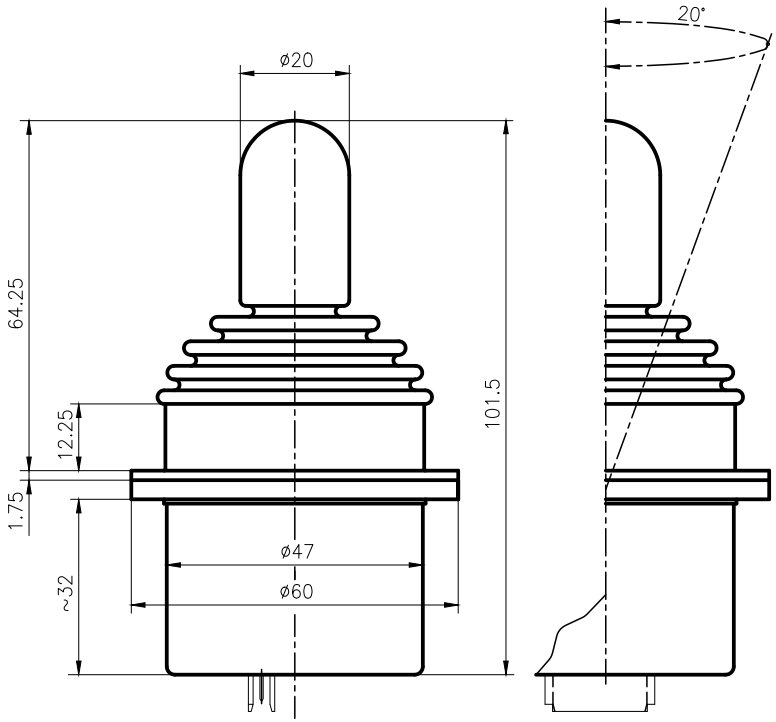

Gate
(Top view)

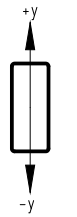

Output diagram

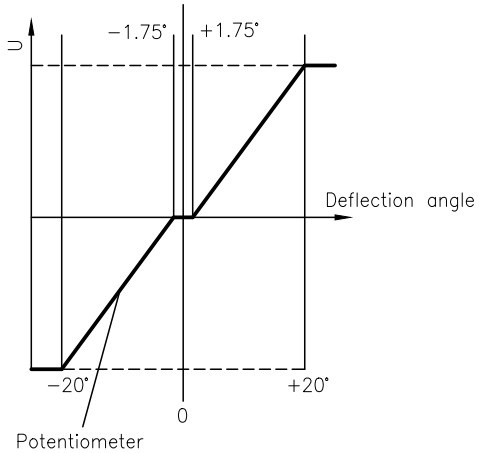

Bottom view

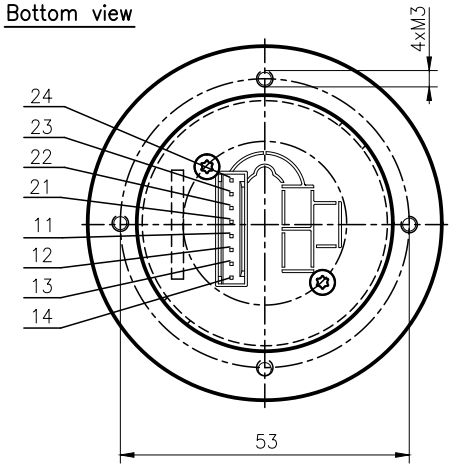

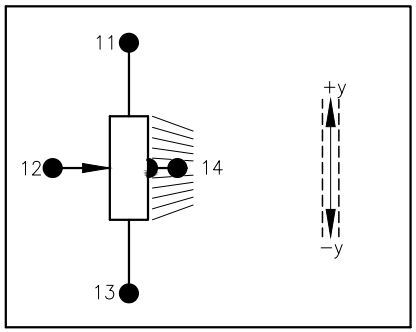

Description	
Joystick Type SK 60−0854	
Number of axis	1−axis, y−axis
Operation by	Rubber bellow 48−203 (sealed)
Connector: DUBOX Walled Header	4−poles: 76384−304
Mating connector: Dubox Housing	4−poles: 65240−004
Cross guidance	soft
Center tab	±1.75°
Detents	4−1−4
Retaining spring	strong Z−Nr. 50−116

Electrical characteristics	
Resistance value	5 kOhm ± 20%
Power disipation	0.2 Watt at 40°C
Operating voltage	max. 30V DC

Axis		Potentiometer		Connector side	
	Direction	Colour/ number	Center tab	Joystick in Mid−position	
x−axis	↑ +x				
	Wiper				
	↓ −x				
y−axis	↑ +y	11 yellow			
	Wiper	12 orange	14 brown		
	↓ −y	13 red			

						Oberfläche	Maßstab 1:1
					Datum	Name	
				Bearb.	06.06.12	Kiener M.	Joystick
				Gepr.			
				Norm			
				GENGE &THOMA AG CH-2543 Lengnau/Biel			60-0854
Zust.	Änderungen	Datum	Name	Dateiname E:\Dwg SK60\60-0854.dwg			

Position | Menge

Blatt

Bl