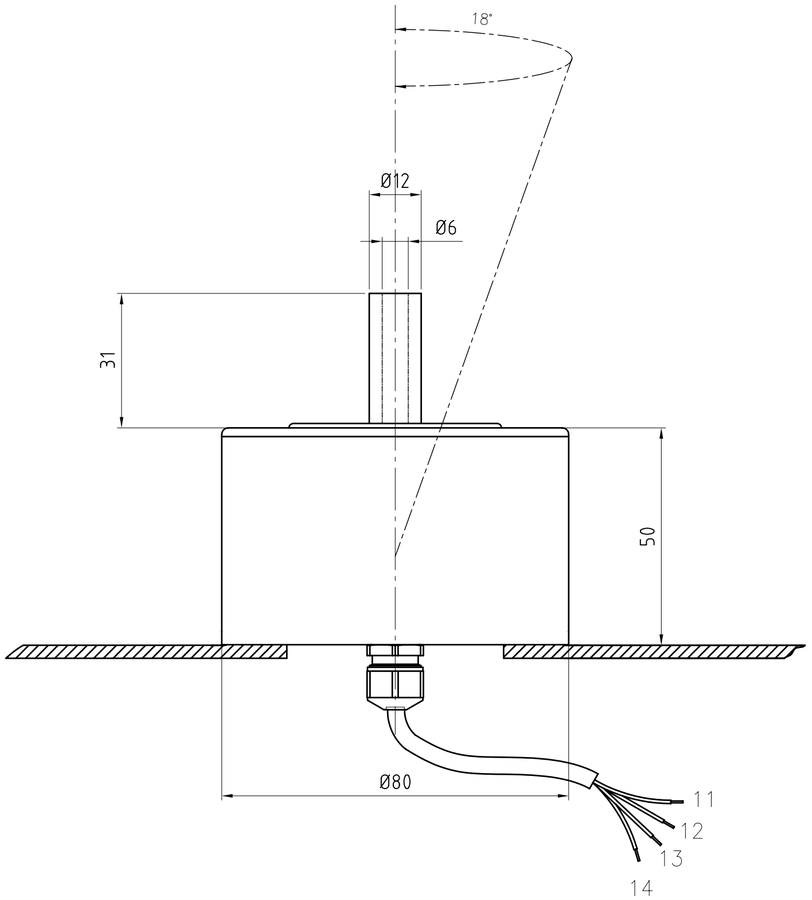

Description	
Joystick Type	SK 80-038
Number of axes	2-axes, x-axis, y-axis proportional y-axis: friction brake
Connection	Cable gland M10/Cable L=200mm
Cross guidance	none
Retaining spring	regular

Electrical characteristics	
Operating Voltage	5V DC
Sensor	Hall effect sensor

Pin		
11	Supply voltage 5V	brown
12	Ground (0V)	white
13	x (-x=0.5V, middle=2.5V, +x=4.5V)	yellow
14	y (-y=0.5V, middle=2.5V, +y=4.5V)	green

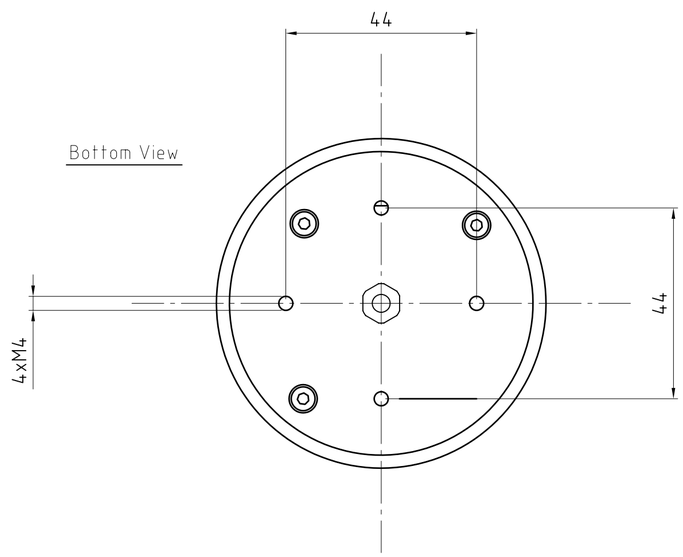

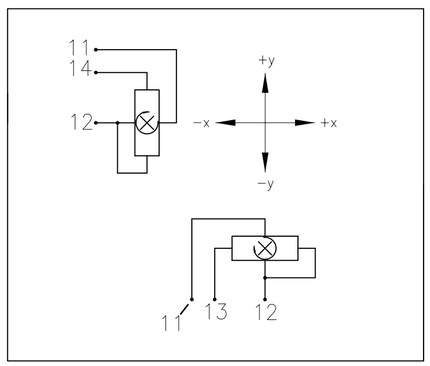

Gate
(Top view)

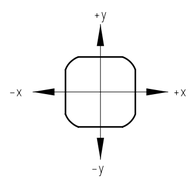

\\Cadsgt\Dwg\Dwg_SK80\Typenzeichnung\80-038.dwg

					Oberfläche	Maßstab 1:1	Position - Menge -
						-	-
						-	-
				Datum	Name	Joystick	
				Bearb. 14.08.2011	DR		
				Gepr.		SK80	
				Norm			
				GENGE &THOMA AG CH-2543 Lengnau/Biel		80-038	Blatt -
Zust.	Änderungen	Datum	Name	Dateiname			Bl