SERIES 3006 – TACT SWITCH

ADVANTAGE

Low installation height

Automatic assembly

Excellent haptics

Perfect lighting

High endurance

Numerous versions

PRODUCT FEATURES

- Recommended for mounting in flat devices, even with integrated LED
- SMD connection technique, reflow lead-free soldering
- Pleasant actuating characteristics due to clearly tangible pressure point and extremely large actuator surface
- Integrated LED provides a central light source
- More than 500,000 switching cycles in 4N version
- Two operating force variants: 4N or N, six LED colors and different brightness groups, other variants available on request

EXAMPLES OF APPLICATION

- Control panels for automotive applications
- Steering wheel switches
- Small household appliances
- Entertainment electronics
- Office equipment
- Medical devices
- Industrial applications
- Large household appliances

Mechanical life endurance	50E4 (4N version) 20E4 (6N version)
Electrical life endurance	14 V DC 10 mA 50E4 (4N version) 14 V DC 10 mA 20E4 (6N version)
Contact resistance (New condition)	< 100 mOhm
Ambient temperature	-40 °C … +95 °C (1h to +120°C)
Material terminals	Gold plated
Bounce time	< 5 ms
Rating	Max. 1 W
Voltage range	20 mV – 28 V
Current range	10 µA – 50 mA
Number of poles	Single-pole
Terminal type	PCB terminal
Protection type → Terminal → Actuator	 IP 40 IP 40

Technical changes reserved. Dimensions are not binding. Detailed specifications available on request.

PRODUCT IMAGE

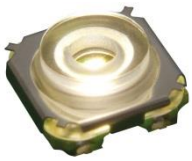

Basic type 3006.2100

DRAWINGS

(Dimensions in mm)

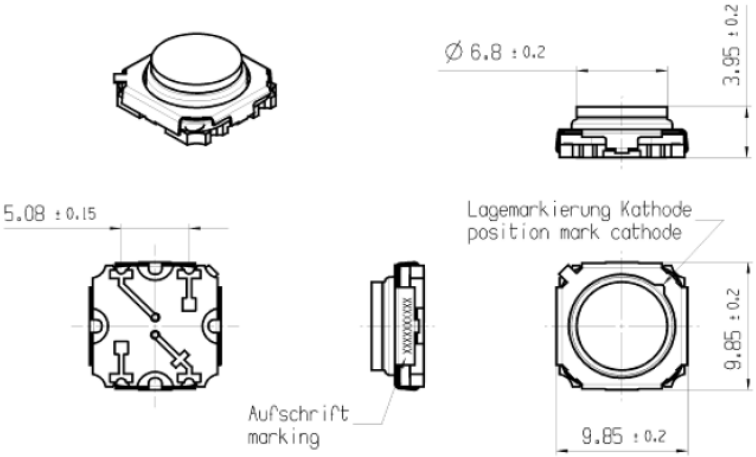

CIRCUIT

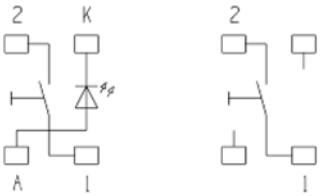

with LED without LED

MISCELLANEOUS

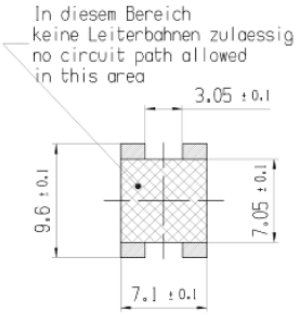

Recommended solder pad design

MARQUARDT

Marquardt Mechatronik GmbH • Schloss-Straße 16 • 78604 Rietheim-Weilheim • Germany
Phone +49 (0) 74 24 / 99-0 • Fax +49 (0) 74 24 / 99-23 99 • marquardt@marquardt.de • www.marquardt.com

© marquardt 01/2014-2